INSTR-GZDB

Dual Alternator Bracket for Ford 7.3L Gas Engine

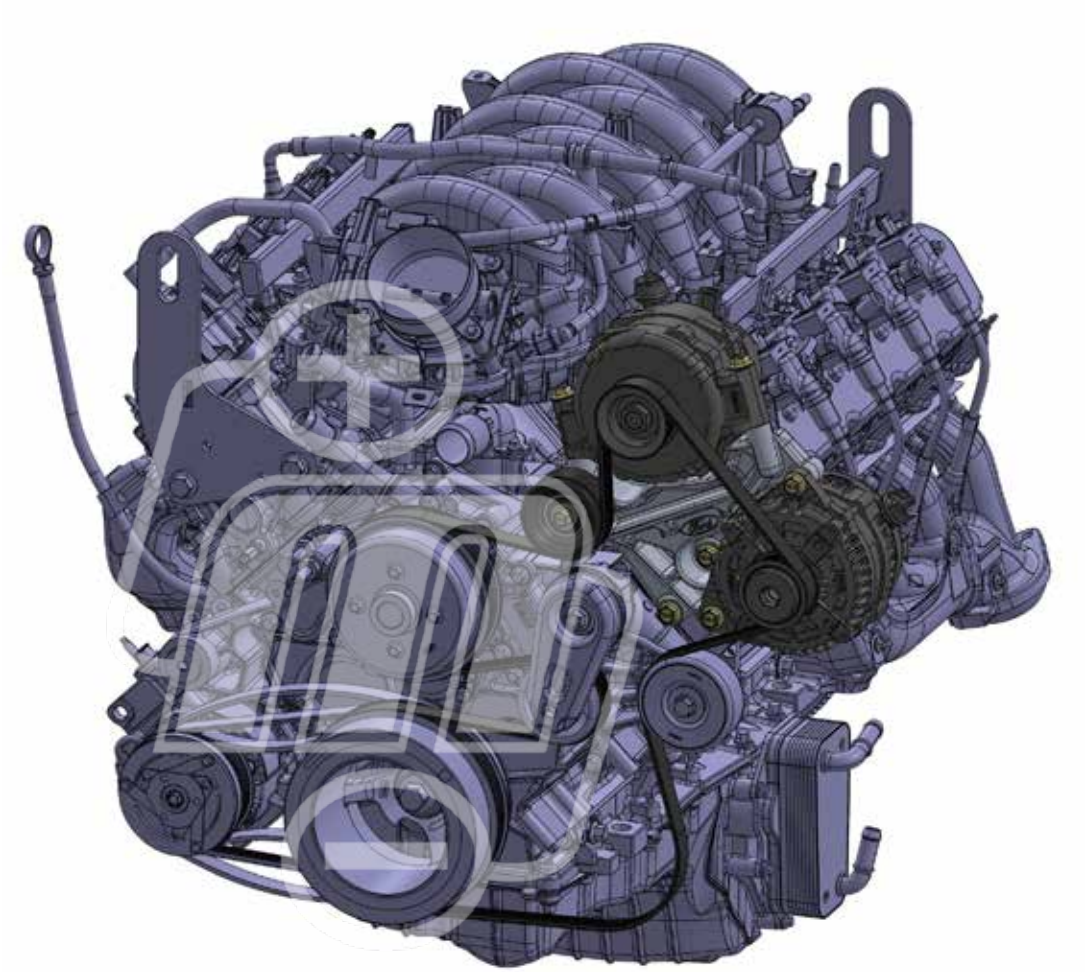

If you are experiencing problems upon installation—

DO NOT RETURN THIS PRODUCT!

Most installation problems can be easily solved.

First contact technical support at:

Service@mechman.com

1 (888) MECHMAN or 865-522-6166

Included Components:

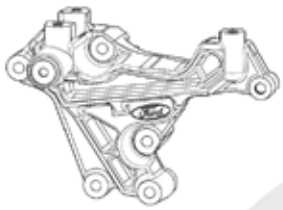

Dual Alternator Bracket - 7.3L	1x

7.3L Step Washer	1x

Smooth Idler Pulley	1x

Serpentine Belt (88.06")	1x

Included Hardware

M10-1.5 x 90mm Flanged Hex Bolt	5x

M10-1.5 x 80mm Flanged Hex Bolt	3x

M10-1.5 x 40mm Flanged Hex Bolt	1x

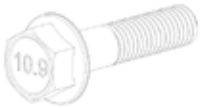

M8-1.25 x 35mm Flanged Hex Bolt	1x

Assembly Instructions:

Step 1: Attach the Dual Alternator Bracket to the Engine

Required Components:

- 1x Dual Alternator Bracket - 7.3L

Required Hardware:

- 4x M10-1.5 x 90mm Flanged Hex Bolt

- Use the M10-1.5 x 90mm Hex Bolts to attach the Dual Alternator Bracket to the Engine

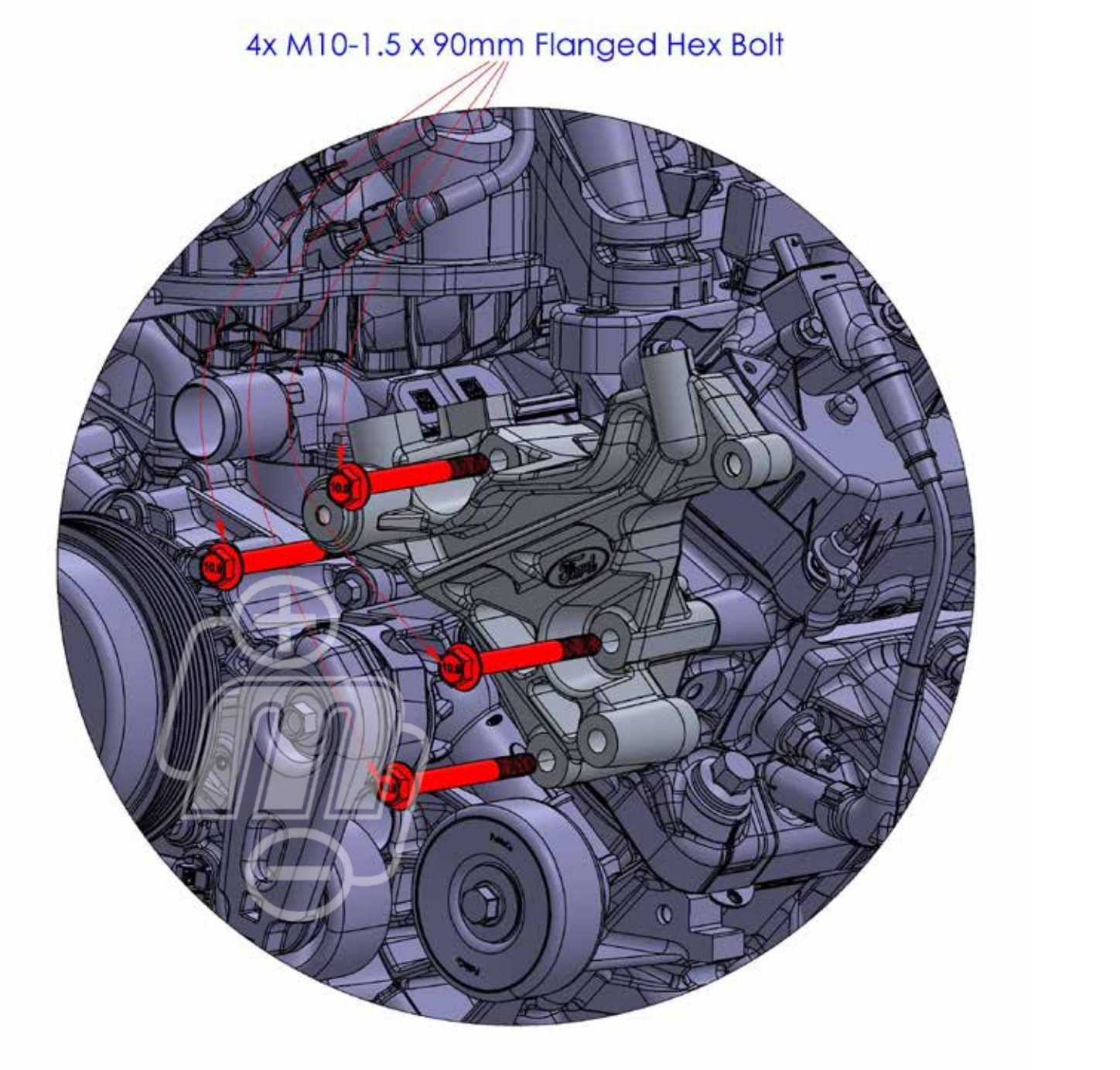

Assembly Instructions:

Step 2: Attach the Idler Pulley to the Dual Alternator Bracket

Required Components:

- 1x Smooth Idler Pulley
- 1x 7.3L Step Washer

Required Hardware:

- 1x M8-1.25 x 35mm Flanged Hex Bolt

- Slide the 7.3L Step Washer into the front of the Idler Pulley
- Use the M8-1.25 x 35mm Flanged Hex Bolt to attach the Idler Pulley to the Dual Alternator Bracket

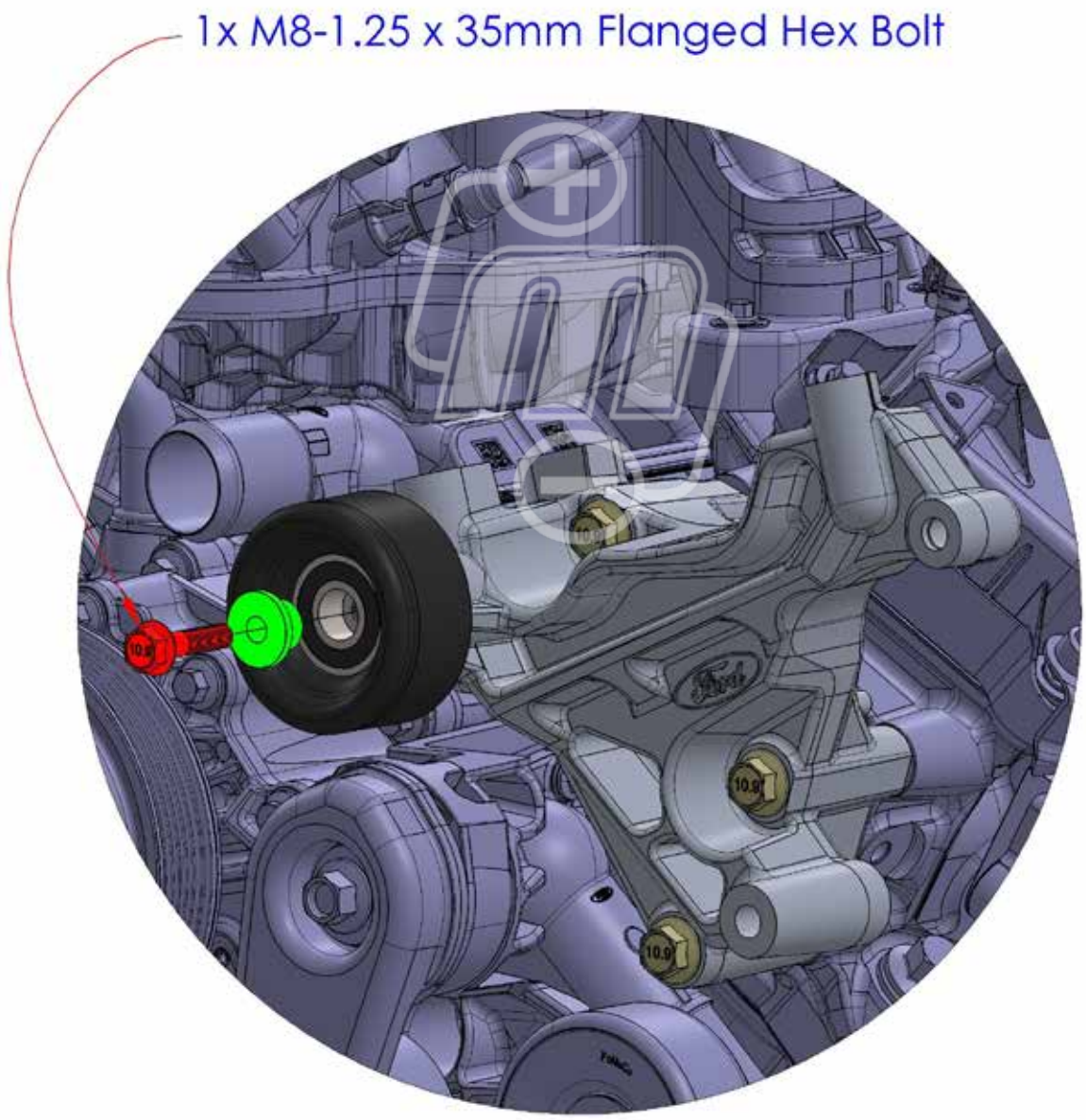

Assembly Instructions:

Step 3: Install an OEM Compatible Alternator (Saddle Mount)

Required Components:

- 1x OEM Compatible Alternator (Not Included)

Required Hardware:

- 1x M10-1.5 x 90mm Flanged Hex Bolt
- 1x M10-1.5 x 40mm Flanged Hex Bolt

- Use the M10-1.5 x 90mm Flanged Hex Bolt and the M10-1.5 x 40mm Flanged Hex Bolt to attach the OEM Compatible Alternator

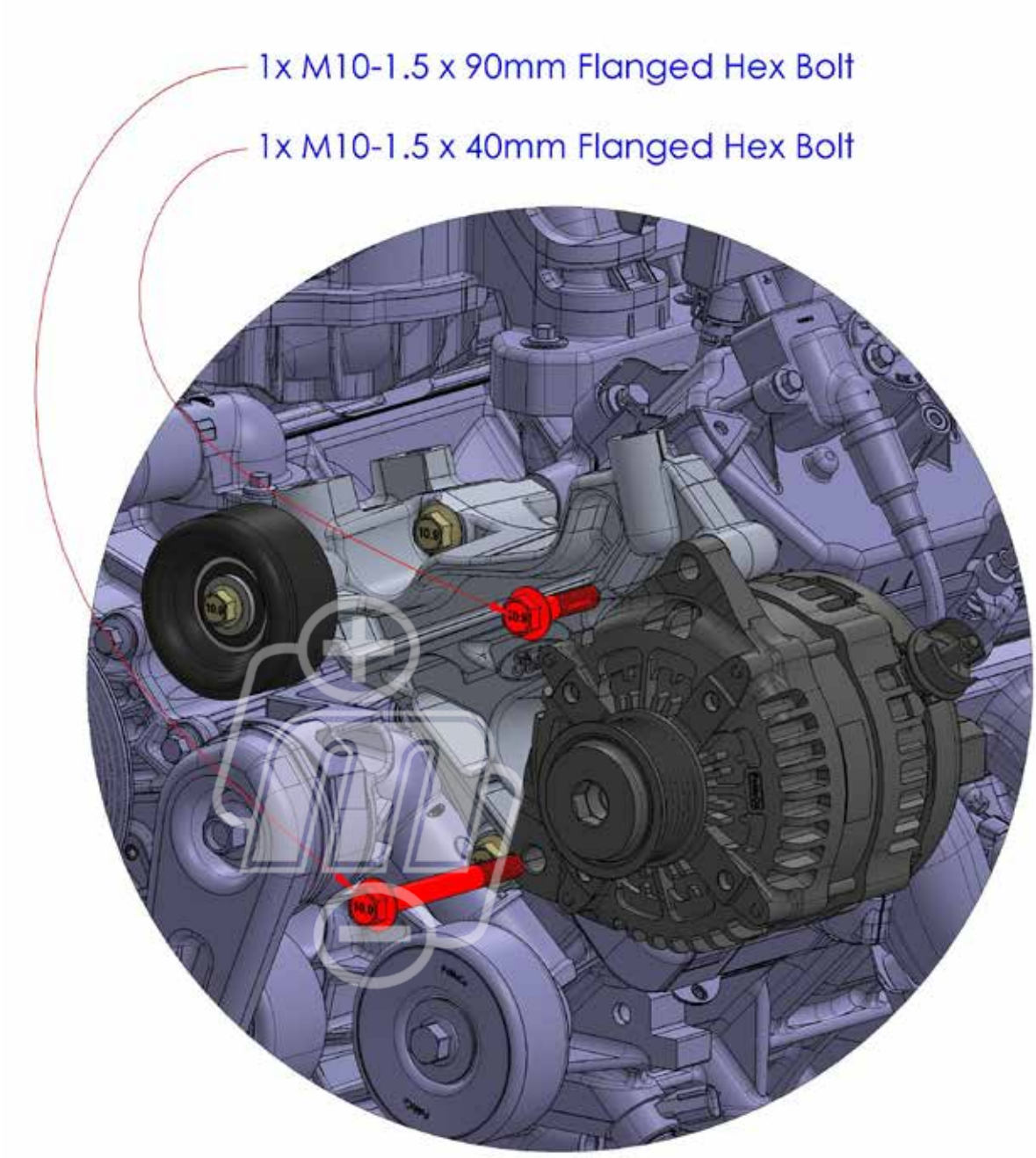

Assembly Instructions:

Step 4: Install the second OEM Compatible Alternator (T-Mount)

Required Components:

- 1x OEM Compatible Alternator (Not Included)

Required Hardware:

- 3x M10-1.5 x 80mm Flanged Hex Bolt

- Use the M10-1.5 x 80mm Flanged Hex Bolts to attach the second OEM Compatible Alternator

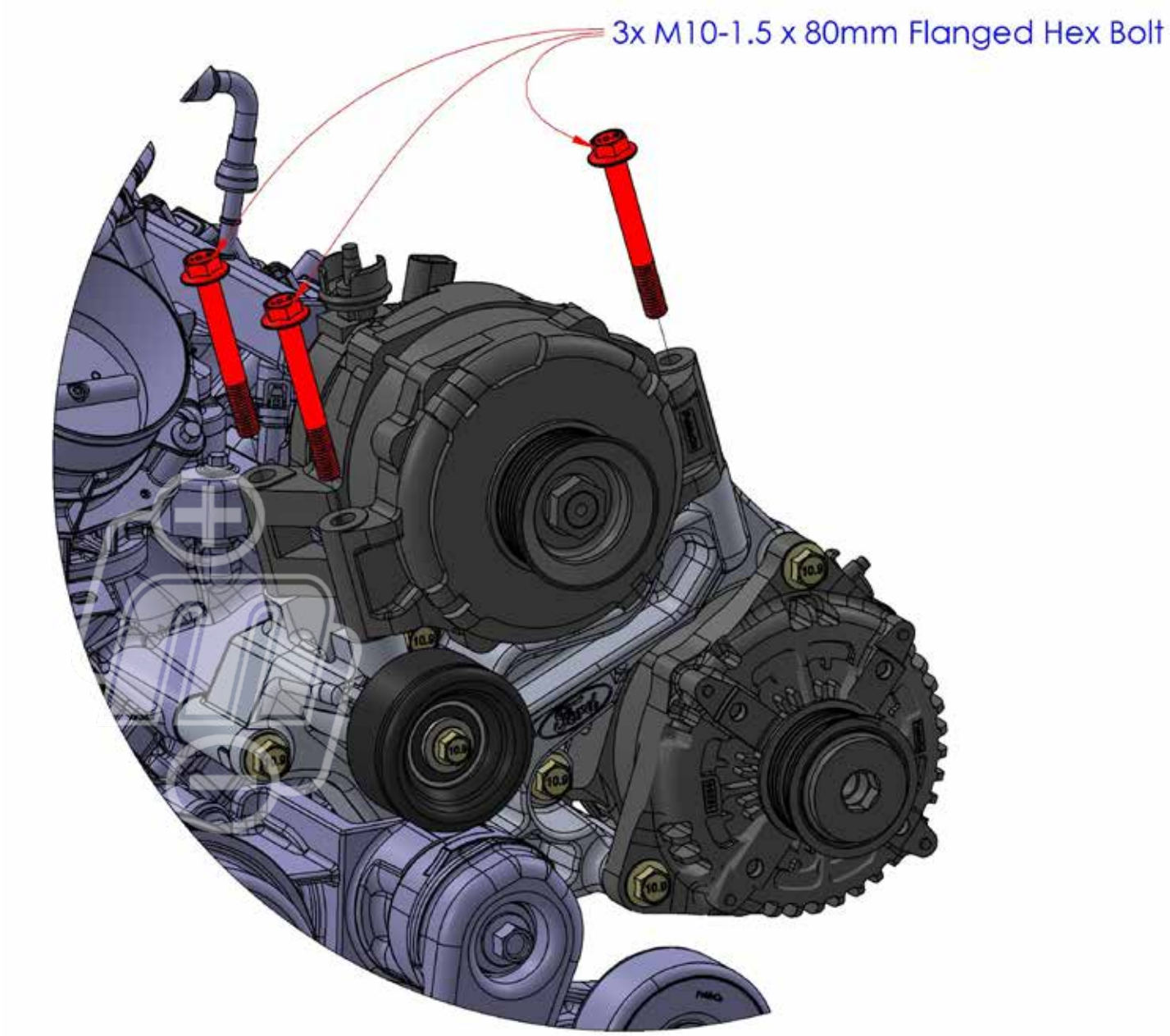

Assembly Instructions:

Step 5: Install the Accessory Belt

Required Components:

- 1x Serpentine Belt (88.06")
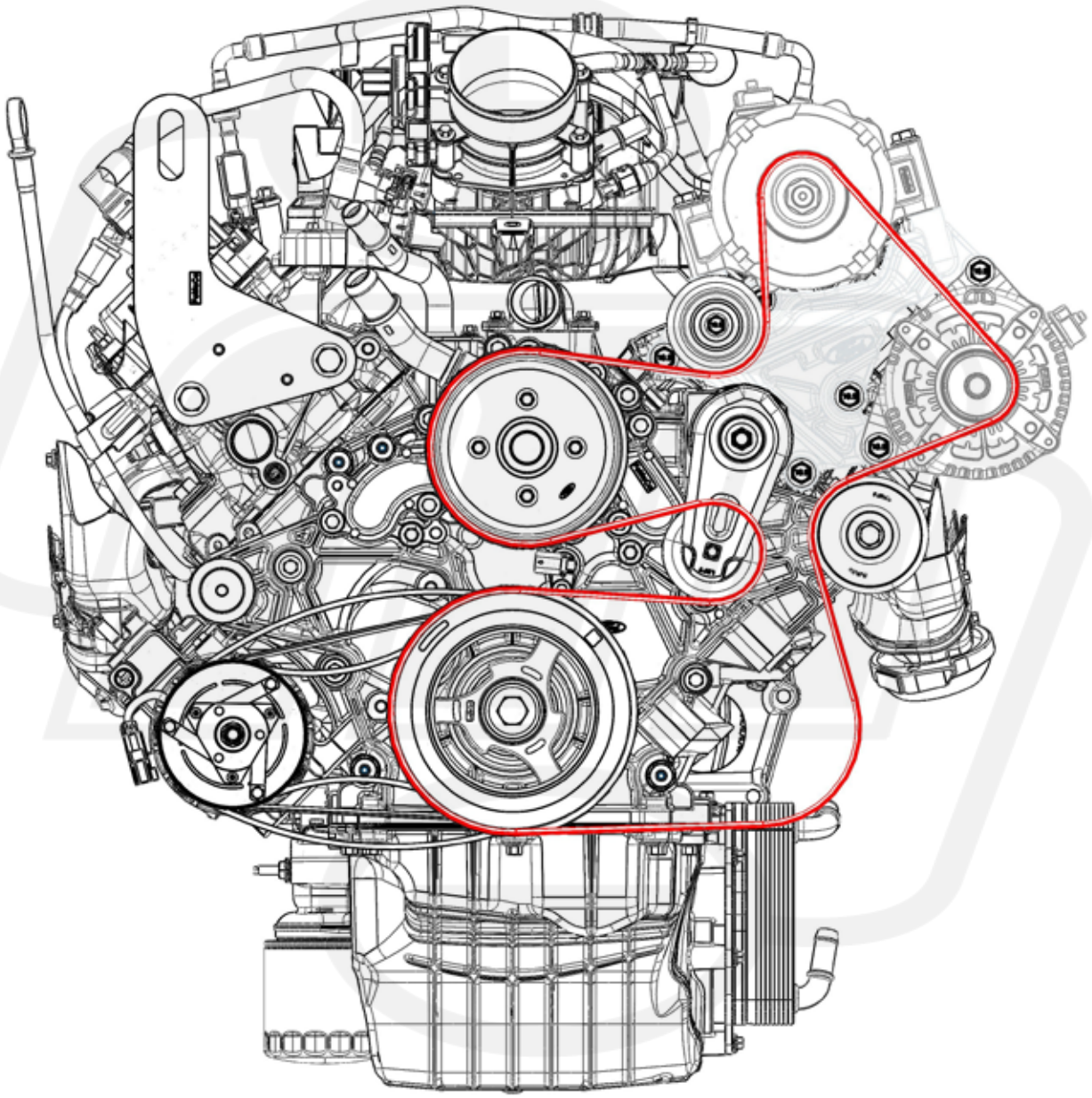
- Wrap the Serpentine Belt around the engine accessories and idler pulleys as shown in the diagram below: